• Example:

1) Simulate the independent evolution of 2 traits on this tree:

2) Calculate the pearson correlation coefficient between the two traits. Here is one example:

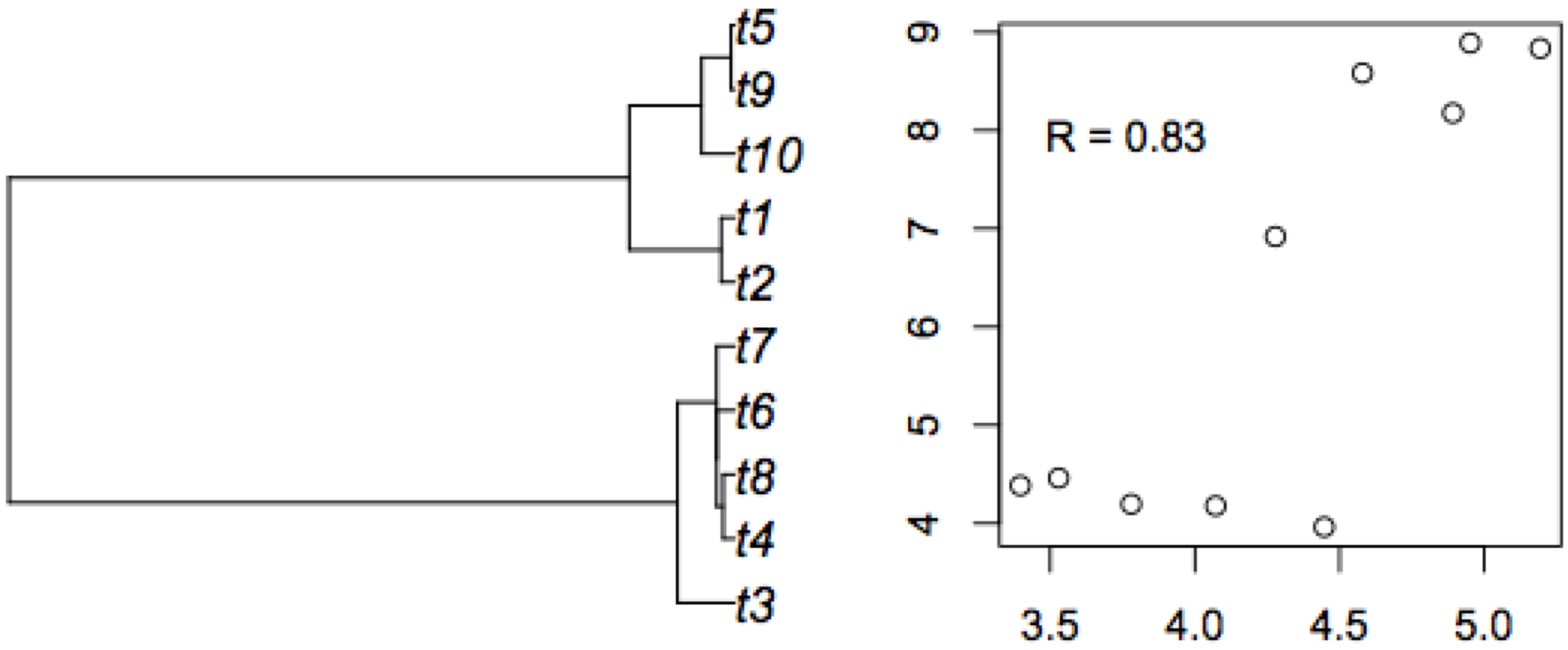

3) Repeat 1000 times and look at the distribution of correlation coefficients. In contrast, the expected distribution, for random data sets with N = 10 is shown on the right. For N = 10, the critical significance value at p <= 0.05 is 0.63; the type I error rate is a whopping 60%!

a

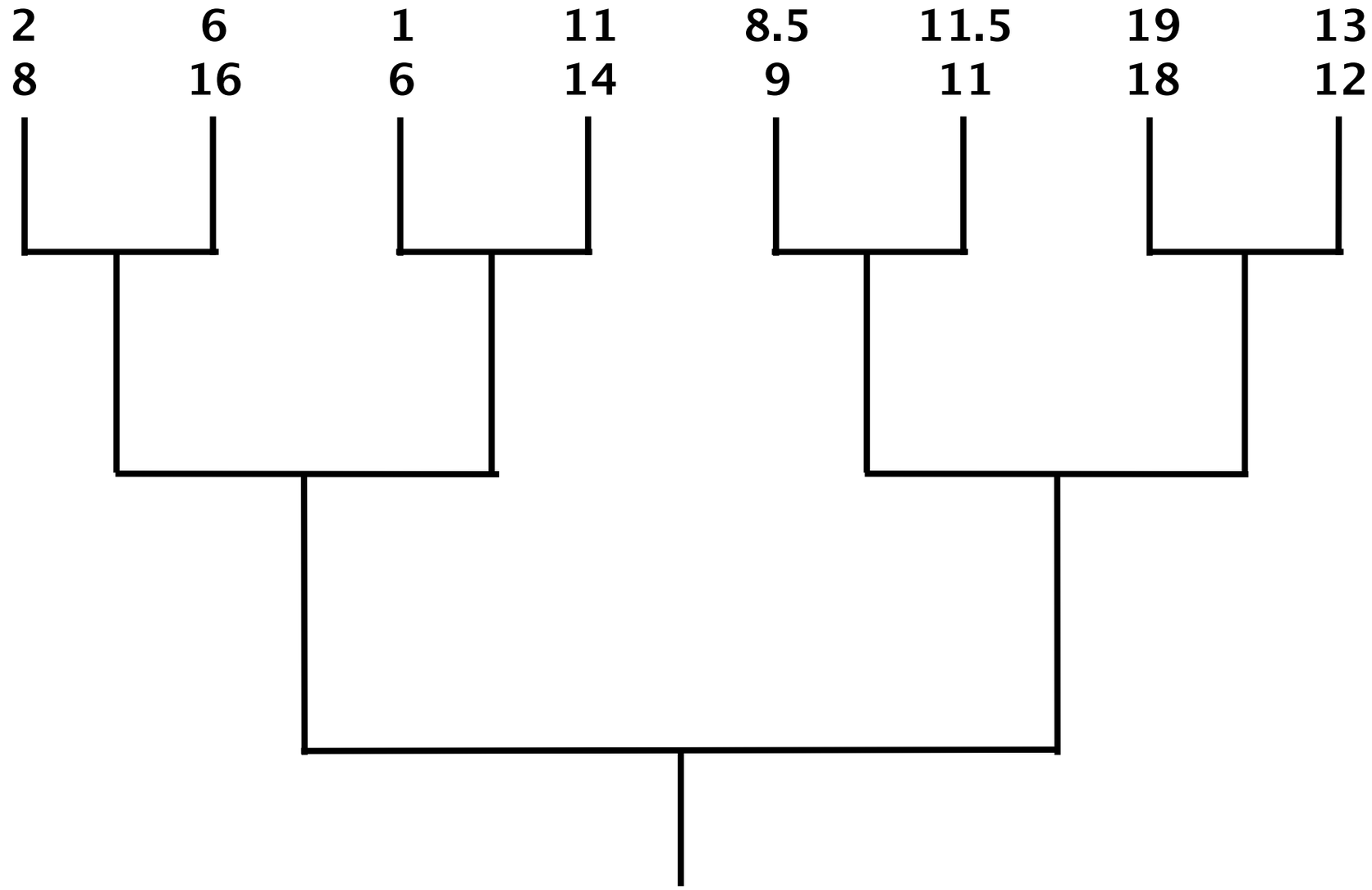
2
8
6
16
1
6
11
14
8.5
9
11.5
11
19
18
13
12

b

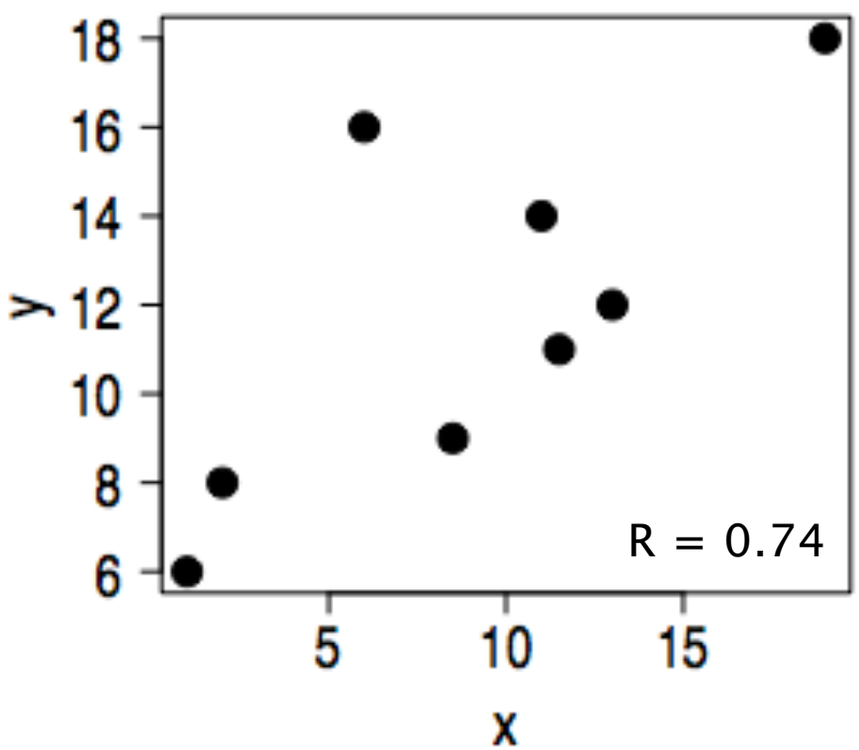
18
16
14
12
10
8
6
y
5
10
15
x
R = 0.74

a

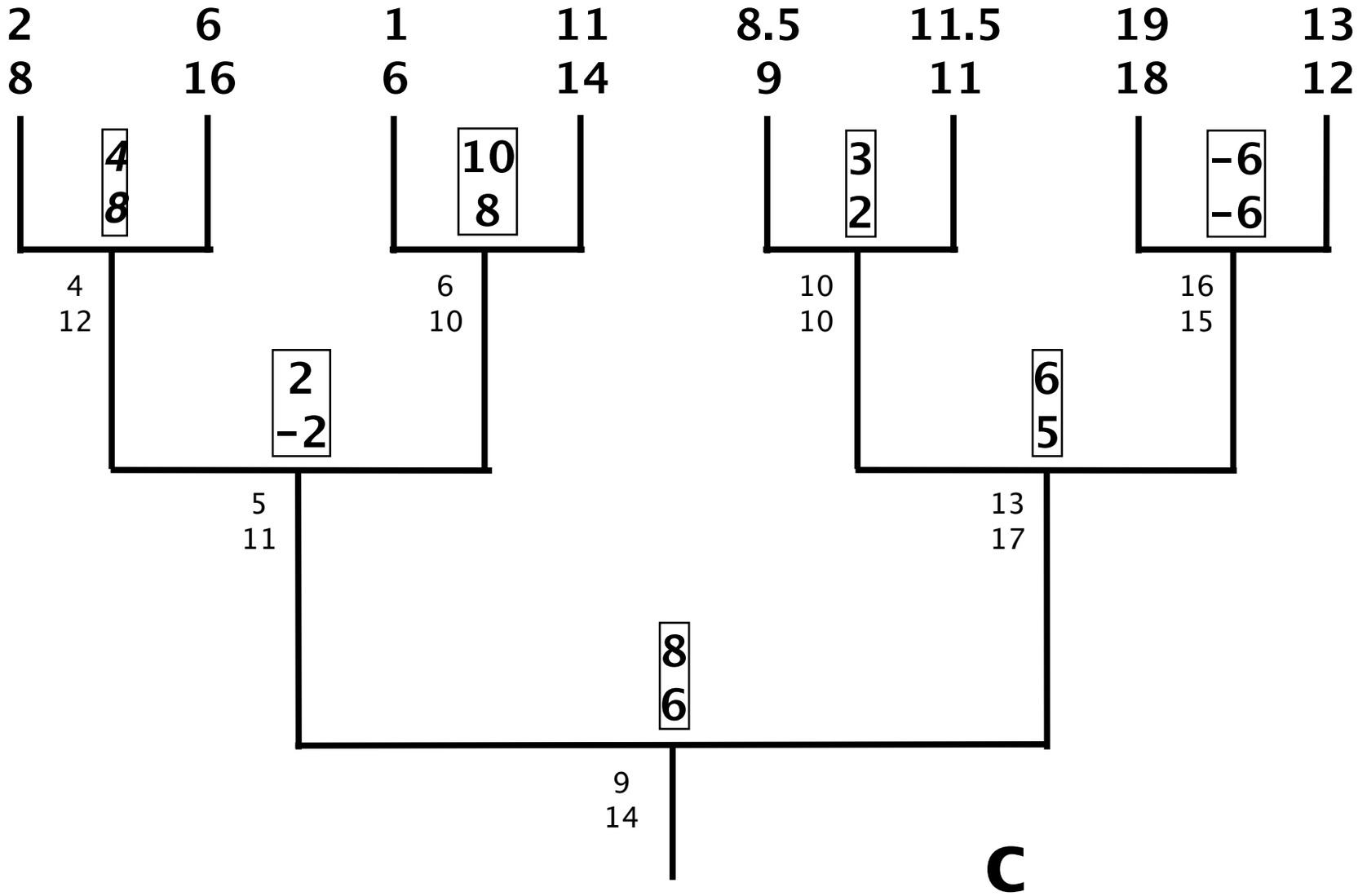
2
8
6
16
1
6
11
14
8.5
9
11.5
11
19
18
13
12
4
8
10
8
3
2
-6
-6
4
12
6
10
10
10
16
15
2
-2
6
5
5
11
13
17
8
6
9
14

b

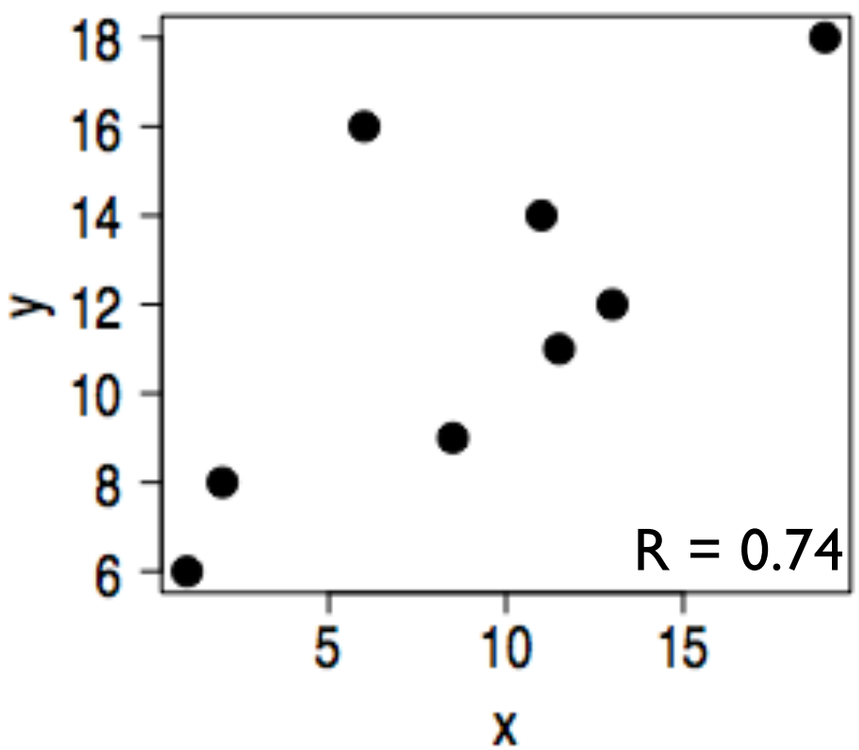
18
16
14
12
10
8
6
y
5
10
15
x
R = 0.74

c

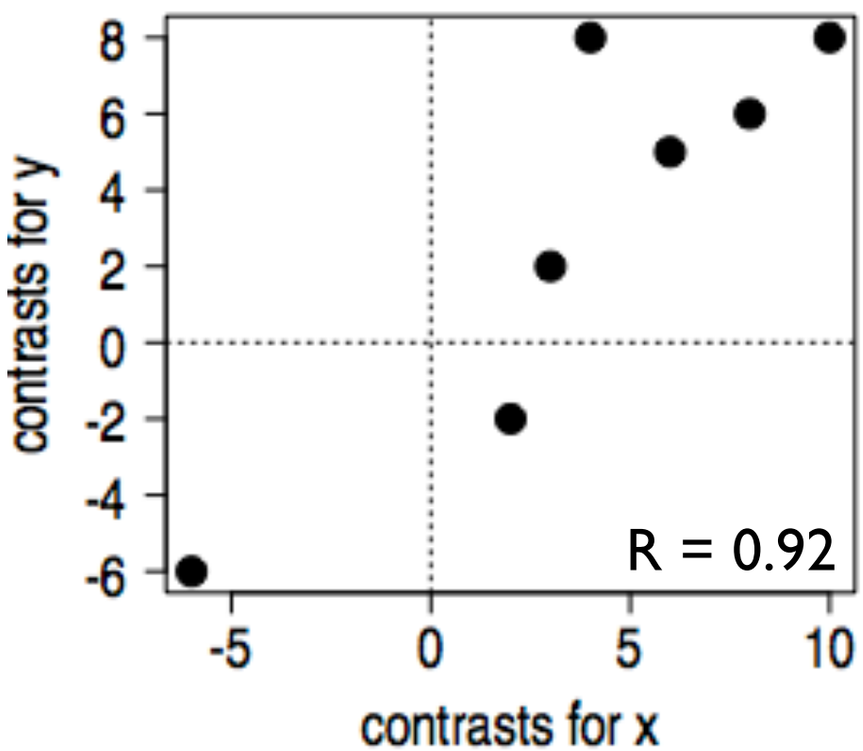
8
6
4
2
0
-2
-4
-6
contrasts for y
-5
0
5
10
contrasts for x
R = 0.92

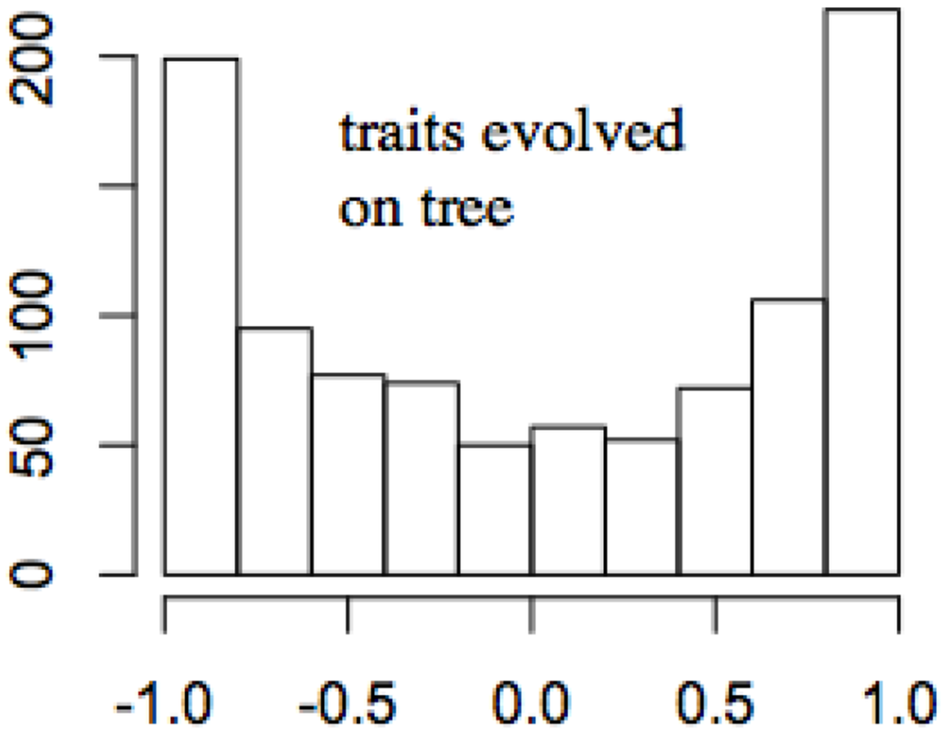

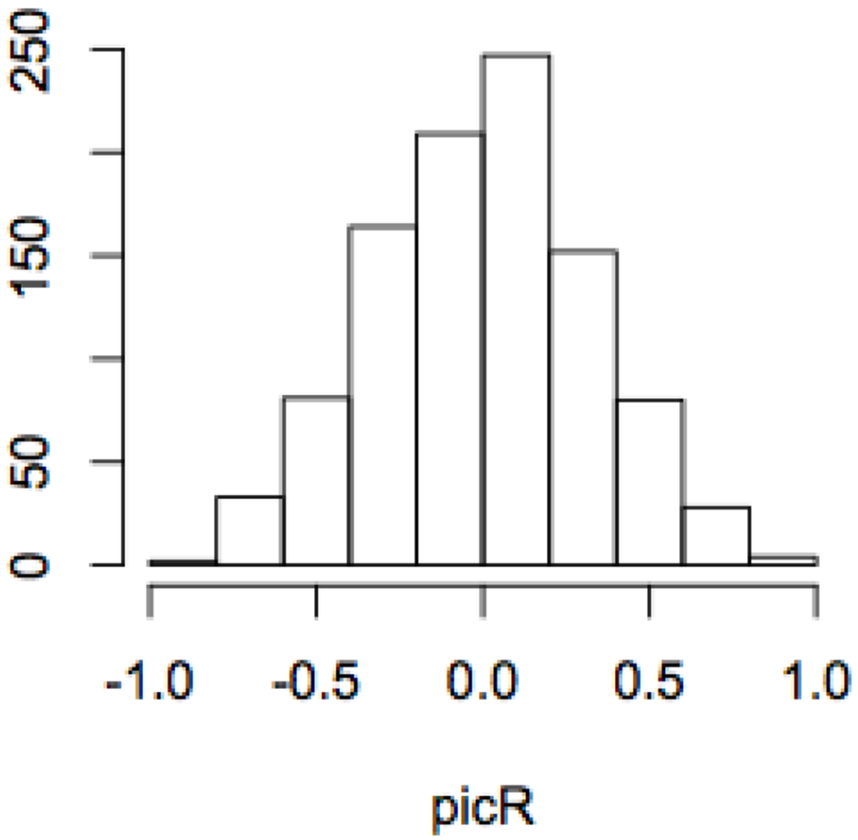

Returning to our example above with the 10 taxon tree, here is the distribution of independent contrasts under the null hypothesis. Type I error for 1000 reps is 0.051% - perfect!

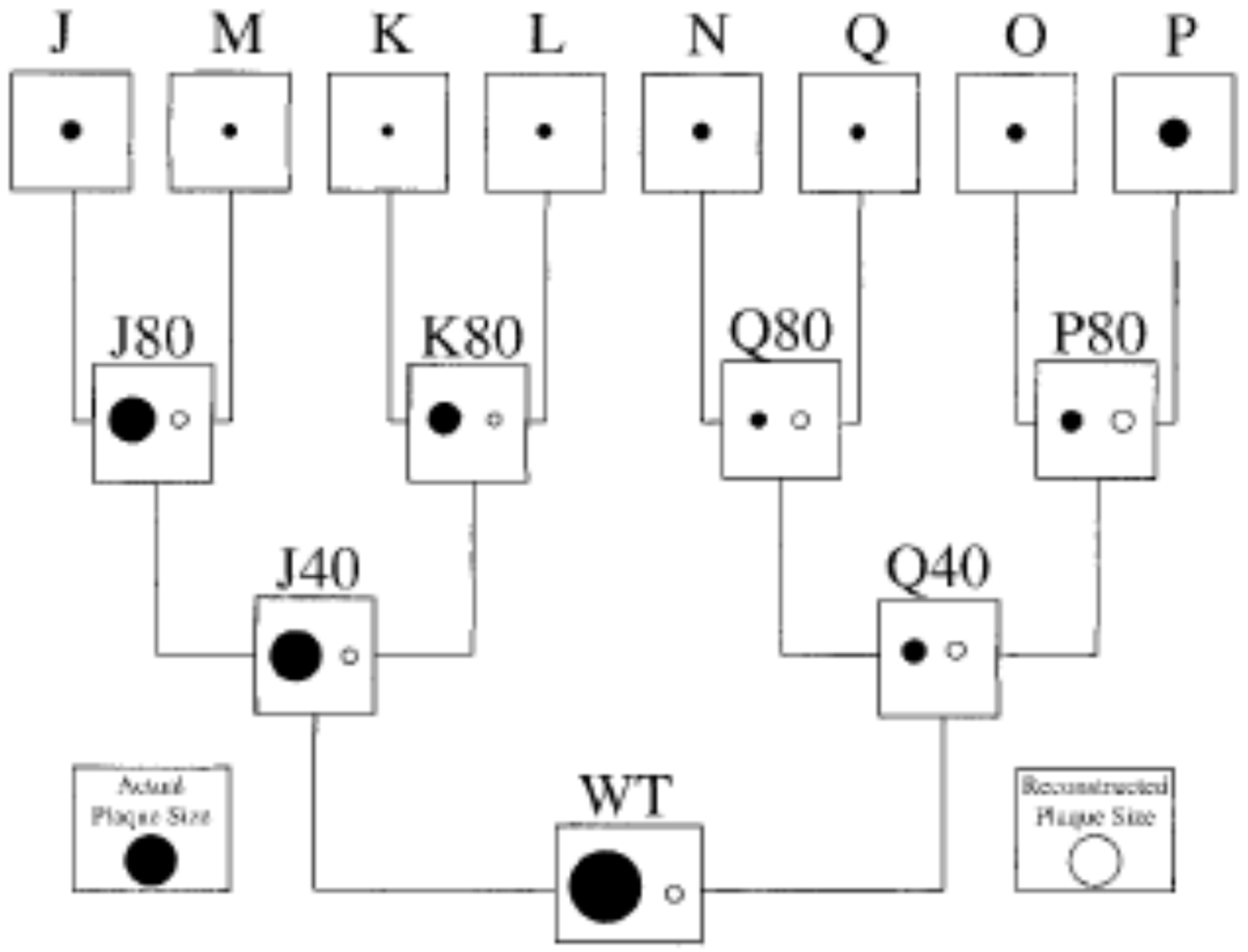

FIG. 2. Comparison of actual (mean) and reconstructed plaque diameters without an outgroup or fossil. Viral plaques from an experimentally generated phylogeny were measured and data for the terminal taxa were used to reconstruct ancestral states using squared-change parsimony (Maddison 1991). Actual values are proportional to black circles and reconstructed values are proportional to white circles.

Oakley and Cunningham 2000

TABLE 4. Comparison of correlational methods. Values are absolute value of "R" and associated *P*-values are in parentheses. Percentages are percent error of R assuming change along branches (using actual ancestors; CAB) is the actual correlation. IC-AA, independent contrasts calculated with actual ancestors; IC, independent contrasts; NP, nonphylogenetic regression.

	Actual correlation		Correlative method	
Characters compared	CAB	IC-AA	IC	NP
Diameter vs. liquid	0.931 (< 0.0001)	0.866 (0.0055)	0.834 (0.0100) −10.4%	0.762 (0.0280) −18.2%
Diameter vs. shape	0.954 (< 0.0001)	0.956 (0.0002)	0.959 (0.0002) 0.5%	0.971 (< 0.0001) 1.8%
Liquid vs. lysis	0.673 (0.0059)	0.749 (0.0324)	0.546 (0.1618) −18.9%	0.108 (0.7990) −84.0%
Diameter vs. lysis	0.517 (0.0485)	0.801 (0.0169)	0.685 (0.0607) 32.5%	0.363 (0.3772) −29.8%
Shape vs. lysis	0.633 (0.0112)	0.681 (0.0630)	0.552 (0.1557) −12.8%	0.214 (0.6113) −66.2%
Shape vs. liquid	0.980 (< 0.0001)	0.849 (0.0076)	0.834 (0.0100) −14.9%	0.783 (0.0216) −20.1%
Mean error			−4.0%	−36.1%
Mean absolute error			15.0%	−36.7%

Oakley and Cunningham 2000

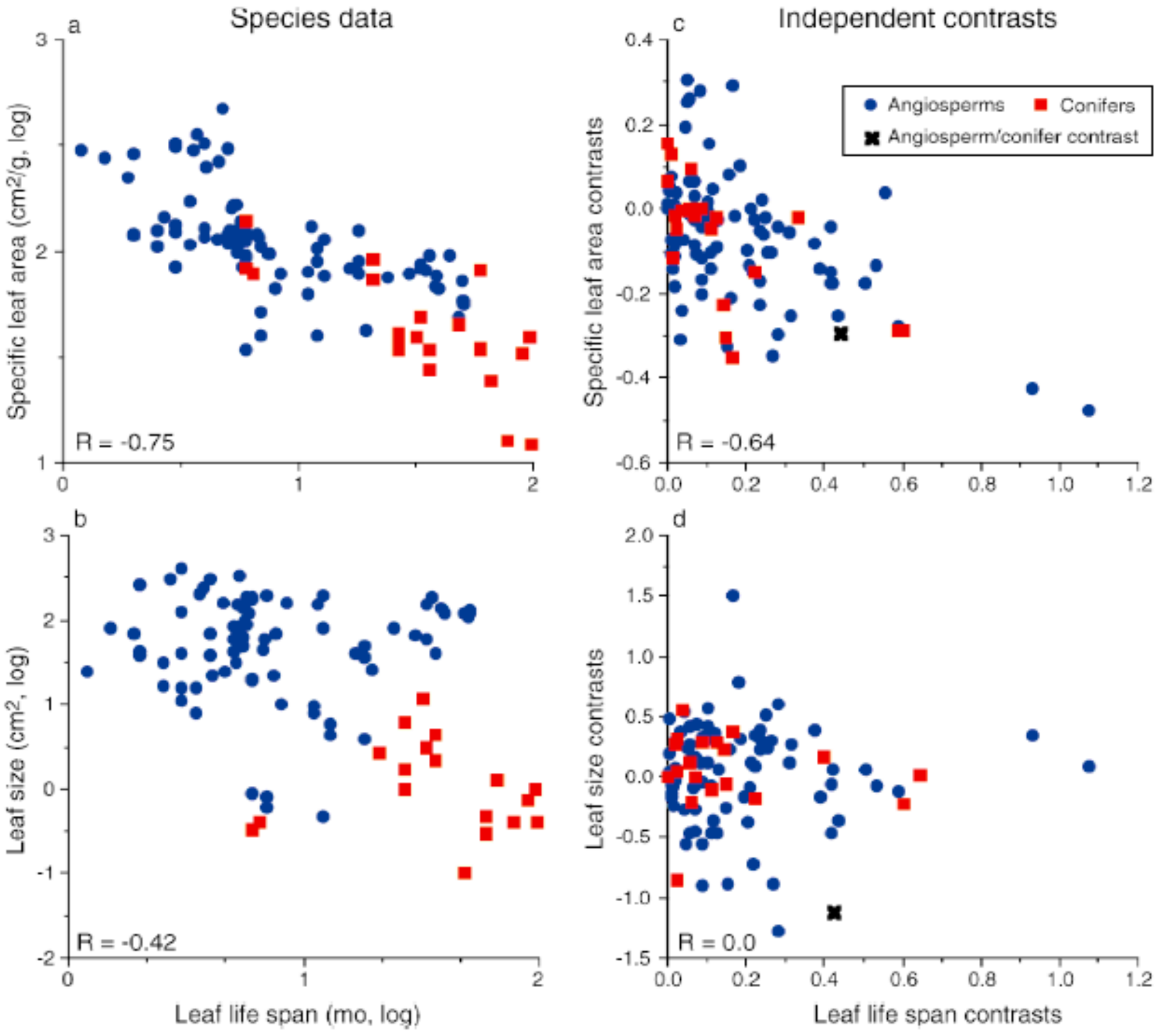
a
Species data
Specific leaf area (cm²/g, log)
R = -0.75
b
Leaf size (cm², log)
R = -0.42
Leaf life span (mo, log)
c
Independent contrasts
Specific leaf area contrasts
Angiosperms
Conifers
Angiosperm/conifer contrast
R = -0.64
d
Leaf size contrasts
R = 0.0
Leaf life span contrasts

3. Tempo and mode of evolution

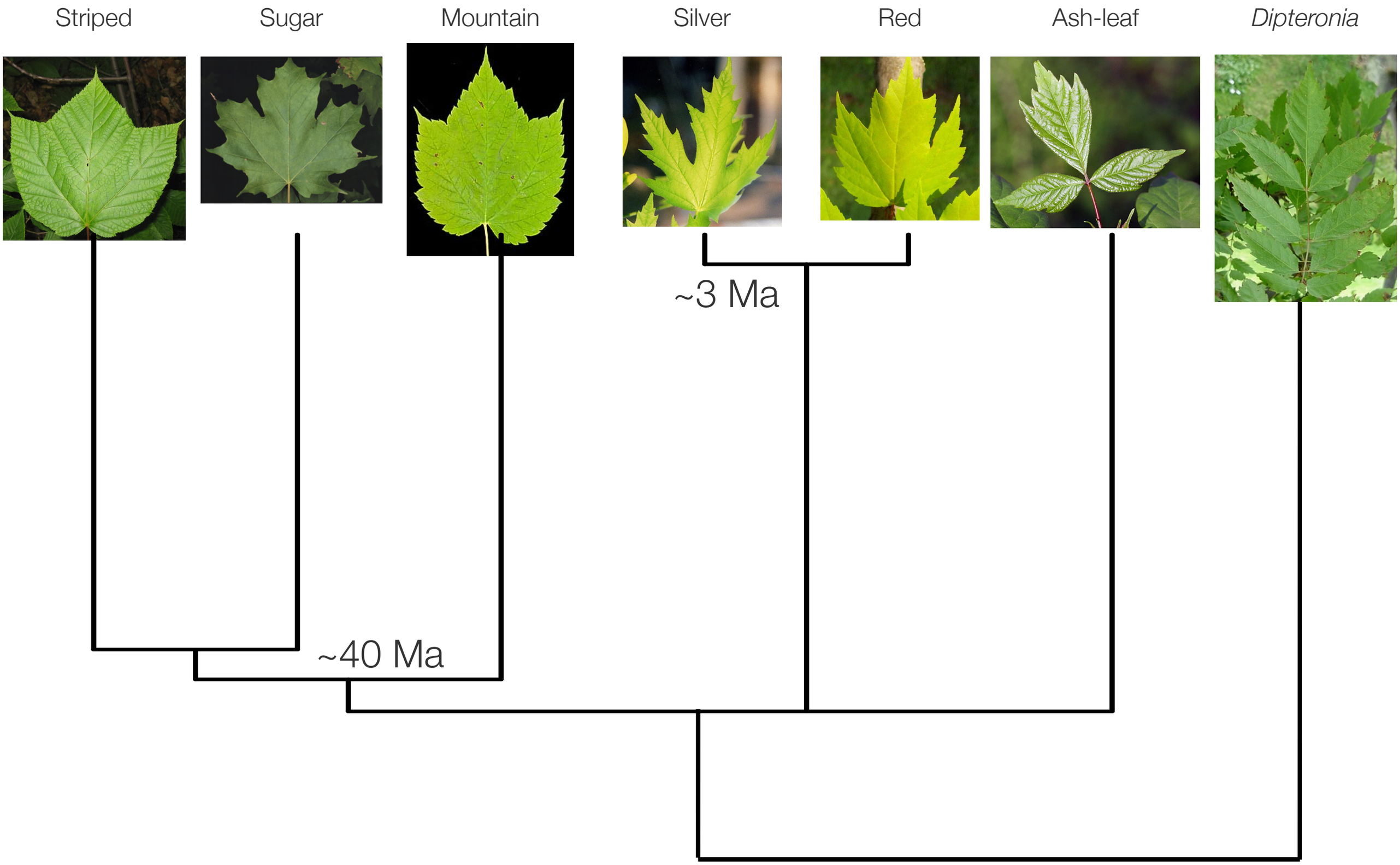

phylogeny and ages from Renner et al. 2008 Syst. Biol.

Blomberg's K – measure of phylogenetic signal

phylogenetic signal →

low | brownian | high

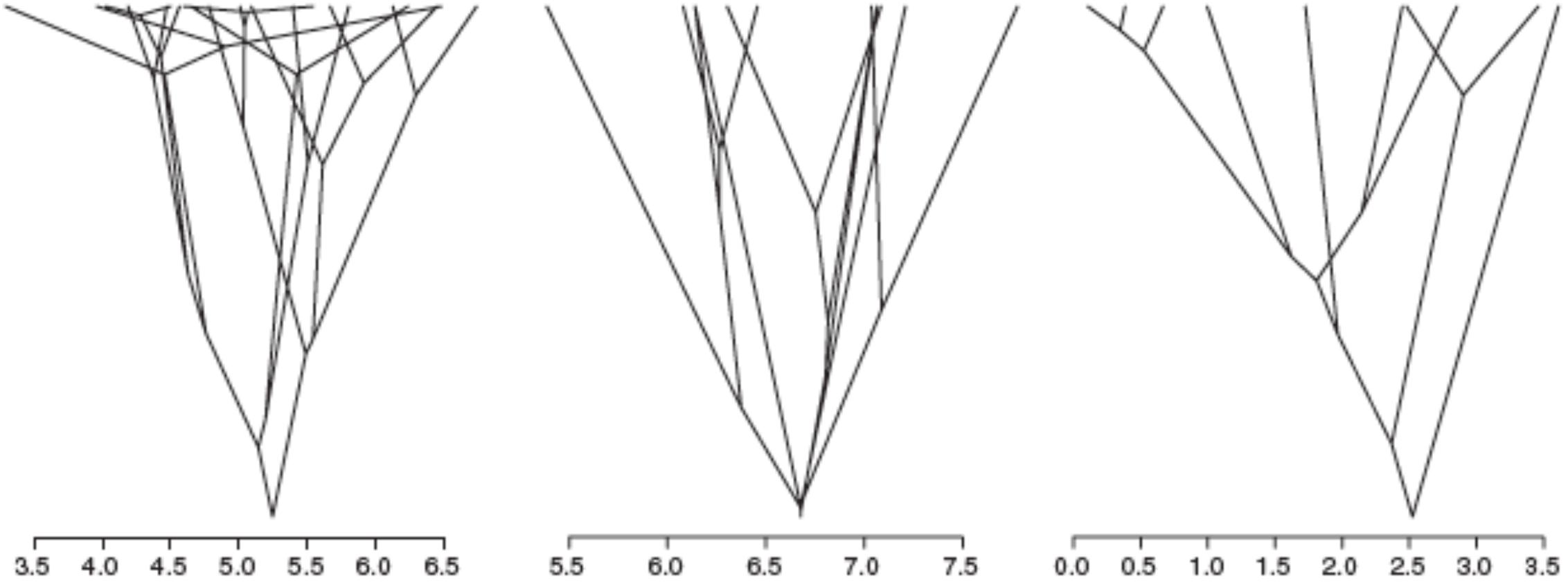

K = 0.18 | K ~ 1 | K = 1.62

Blomberg et al. 2003 *Evolution*
examples from Ackerly 2009 *PNAS*

- do traits fit Brownian model? can we use model fitting to answer evolutionary questions?
- pattern vs. process table

	Pattern of trait evolution	
Evolutionary process	Stasis	Change
Adaptive	Stabilizing selection Fluctuating directional selection	Directional or disruptive selection
Non-adaptive	Lack of genetic variation (= constraint?) Antagonistic correlations among traits under selection Swamping by gene flow	Mutation Genetic drift Genetic correlations with traits under selection

Brownian motion – assumptions and interpretations

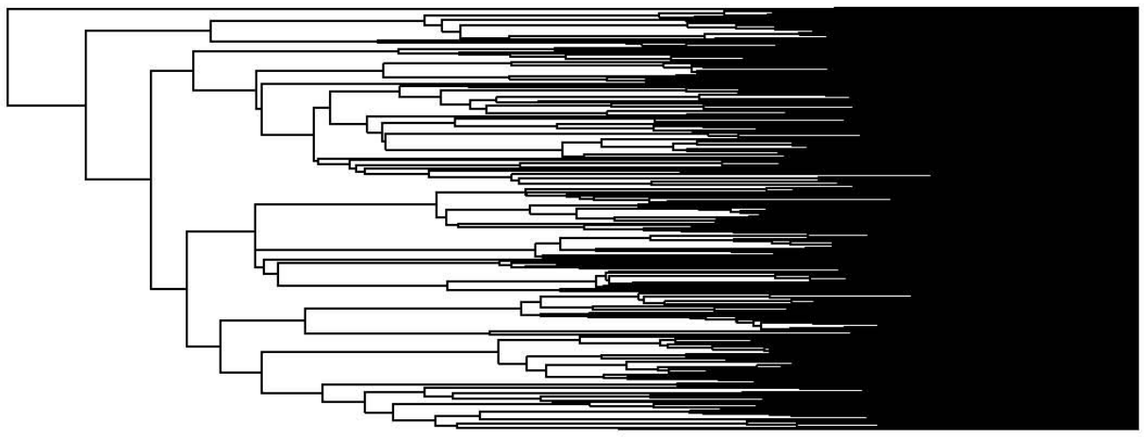

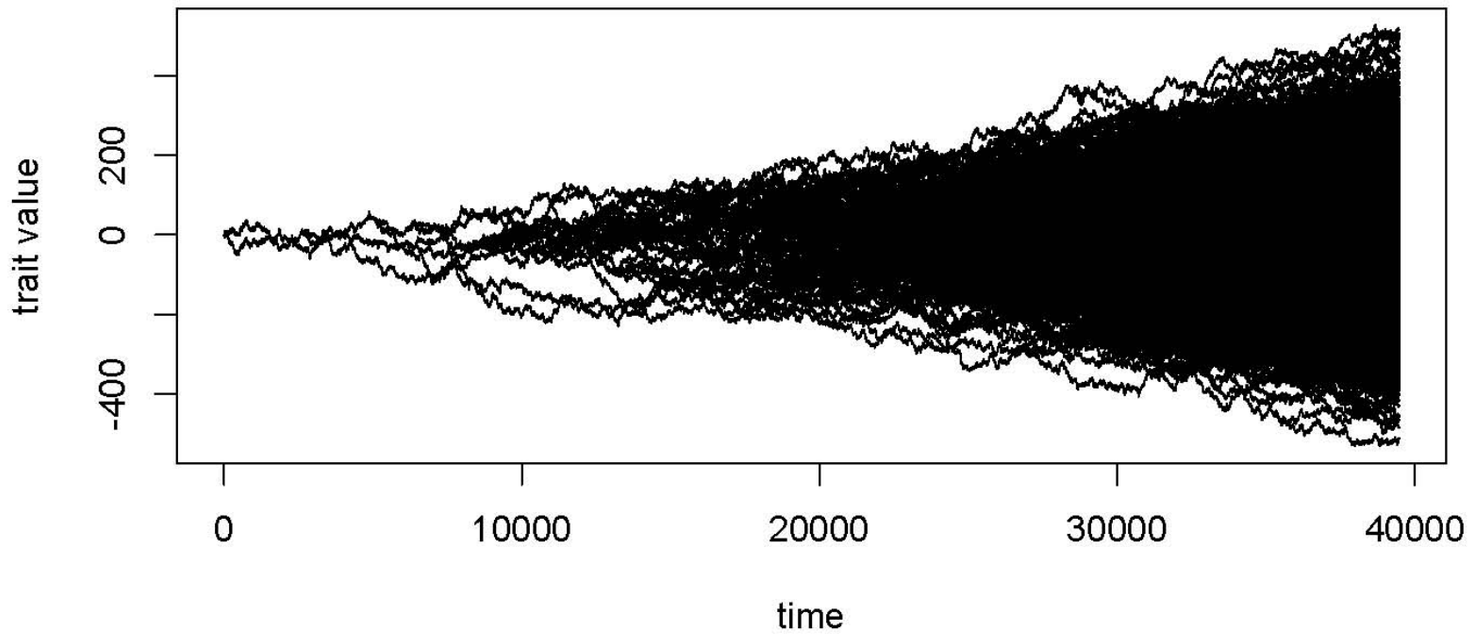

Brownian motion – assumptions and interpretations

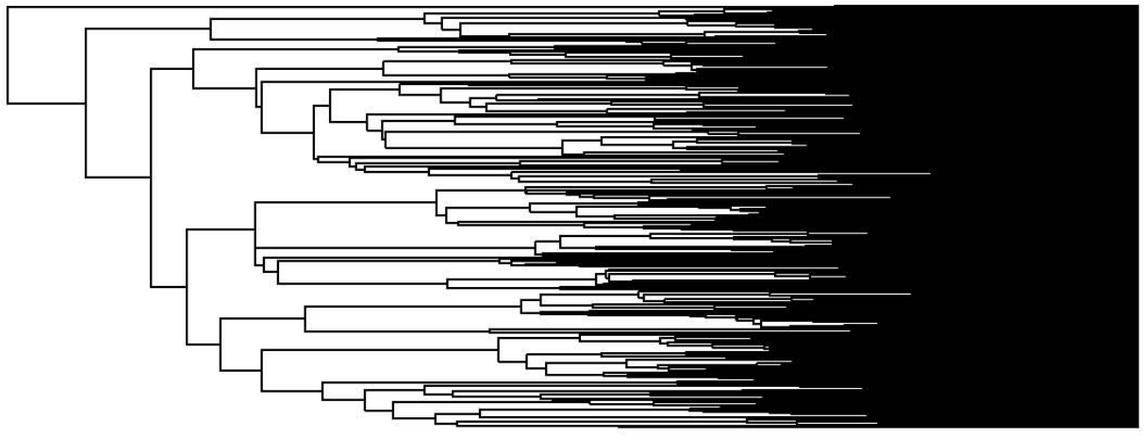

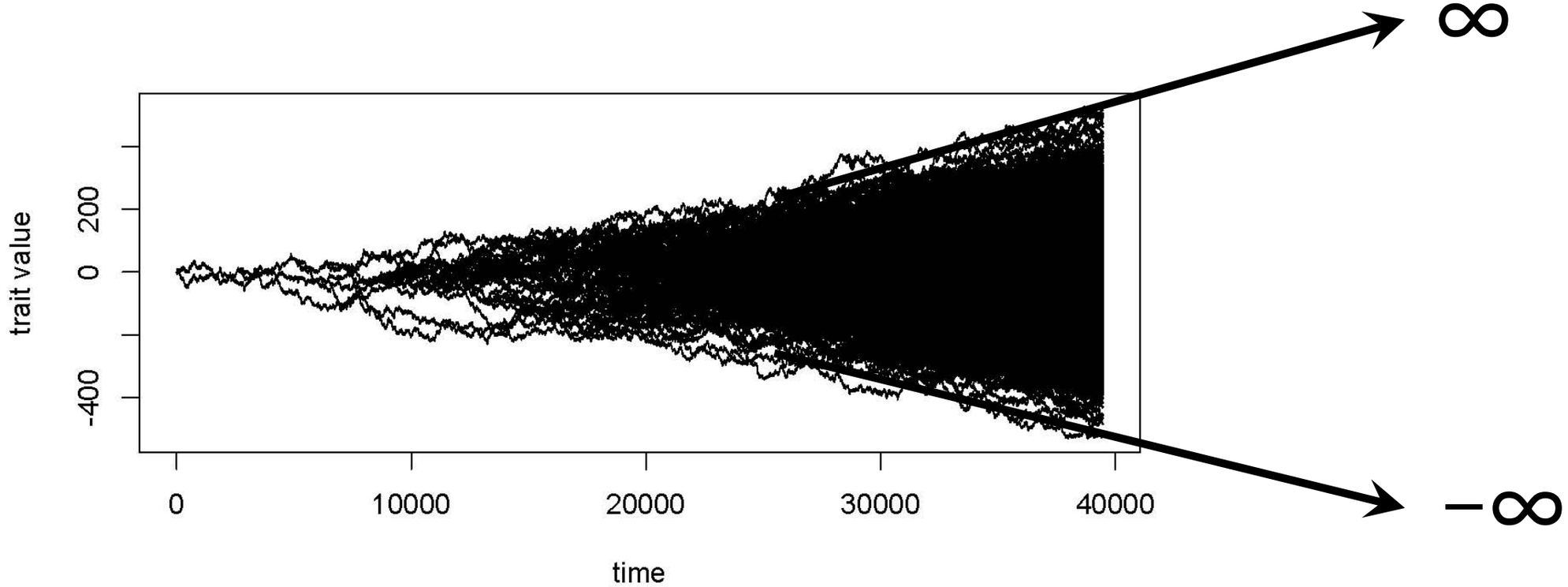

Ornstein-Uhlenbeck model (OU-1)

the math:
brownian motion + ‘rubber band effect’

change is unbounded (in theory), but as rubber band gets stronger, bounds are established in practice

repeated movement back towards center erases phylogenetic signal, leading to K << 1

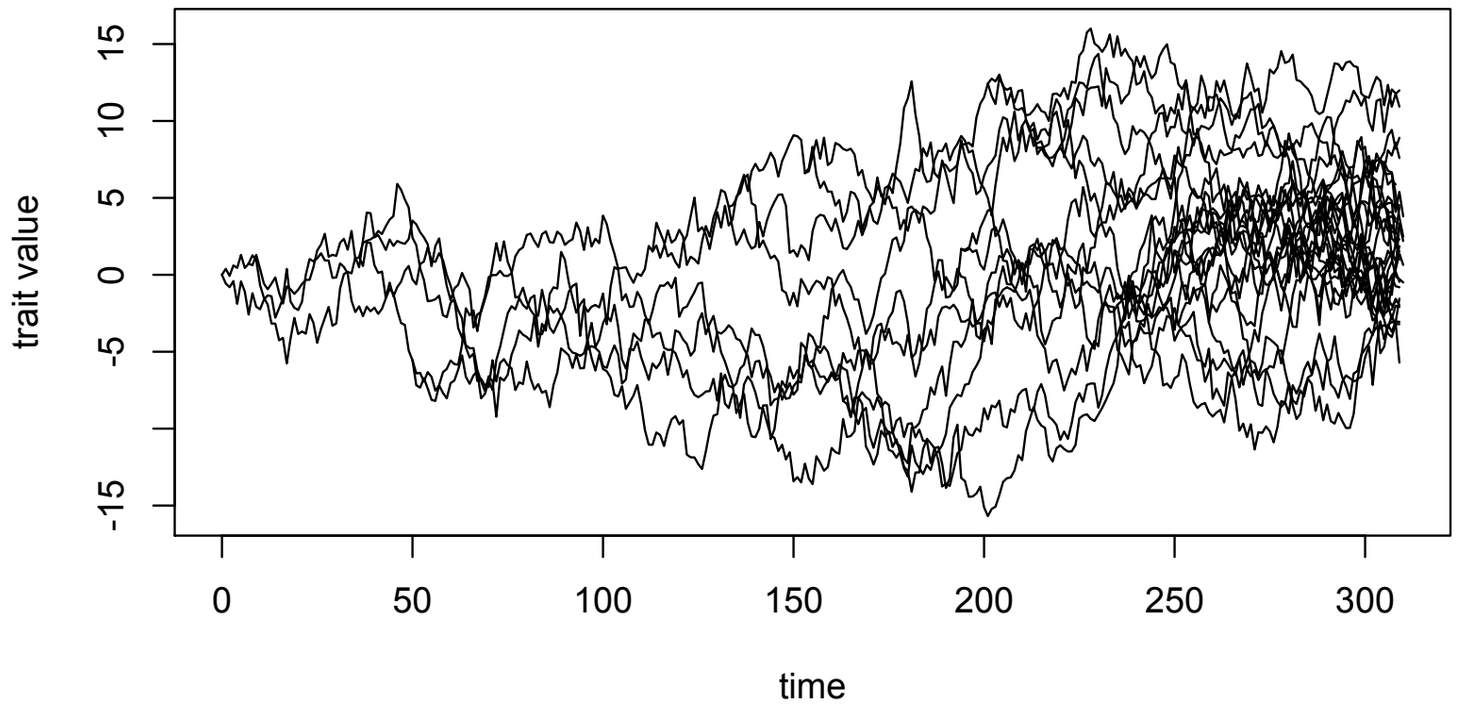

see Hansen 1997 *Evolution*
Butler and King 2004 *Amer. Naturalist*

Ornstein-Uhlenbeck model (OU-1)

the math:
brownian motion + ‘rubber band effect’

change is unbounded (in theory), but as rubber band gets stronger, bounds are established in practice

repeated movement back towards center erases phylogenetic signal, leading to K << 1

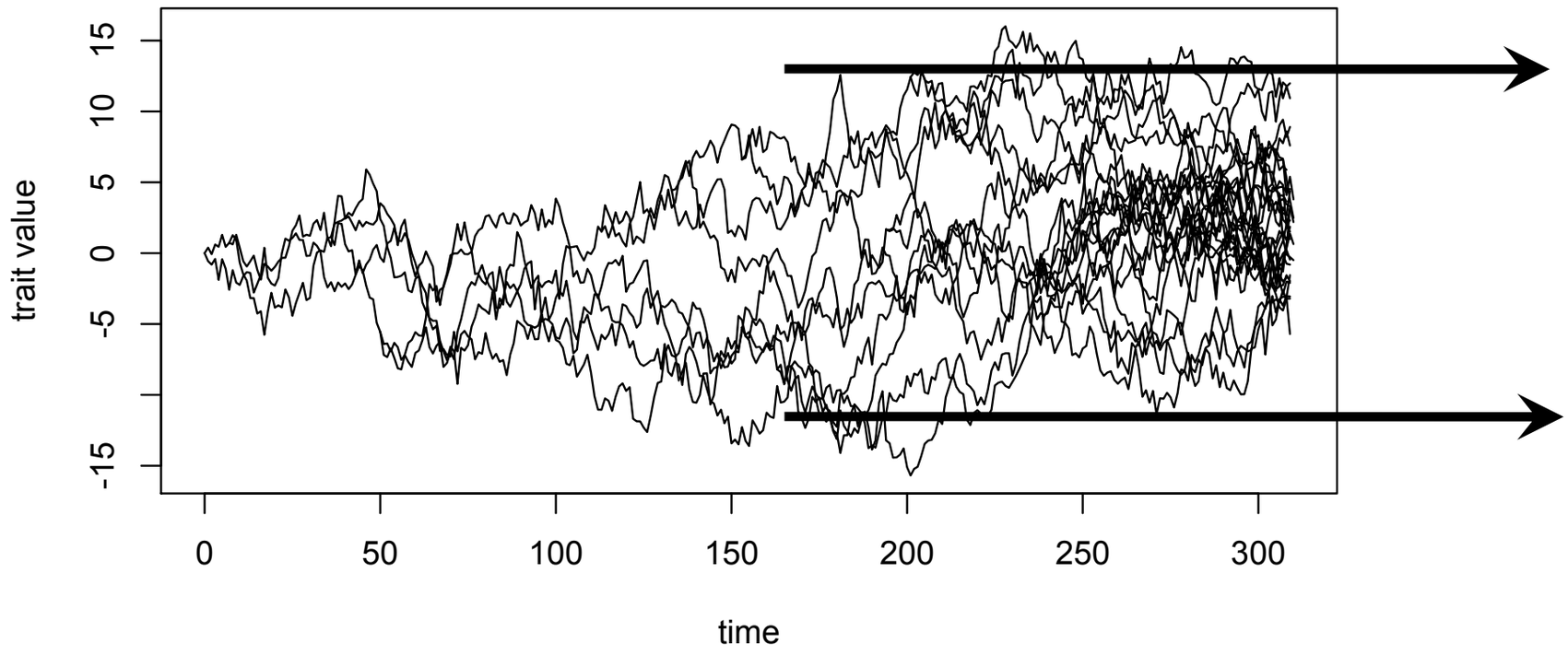

see Hansen 1997 *Evolution*
Butler and King 2004 *Amer. Naturalist*

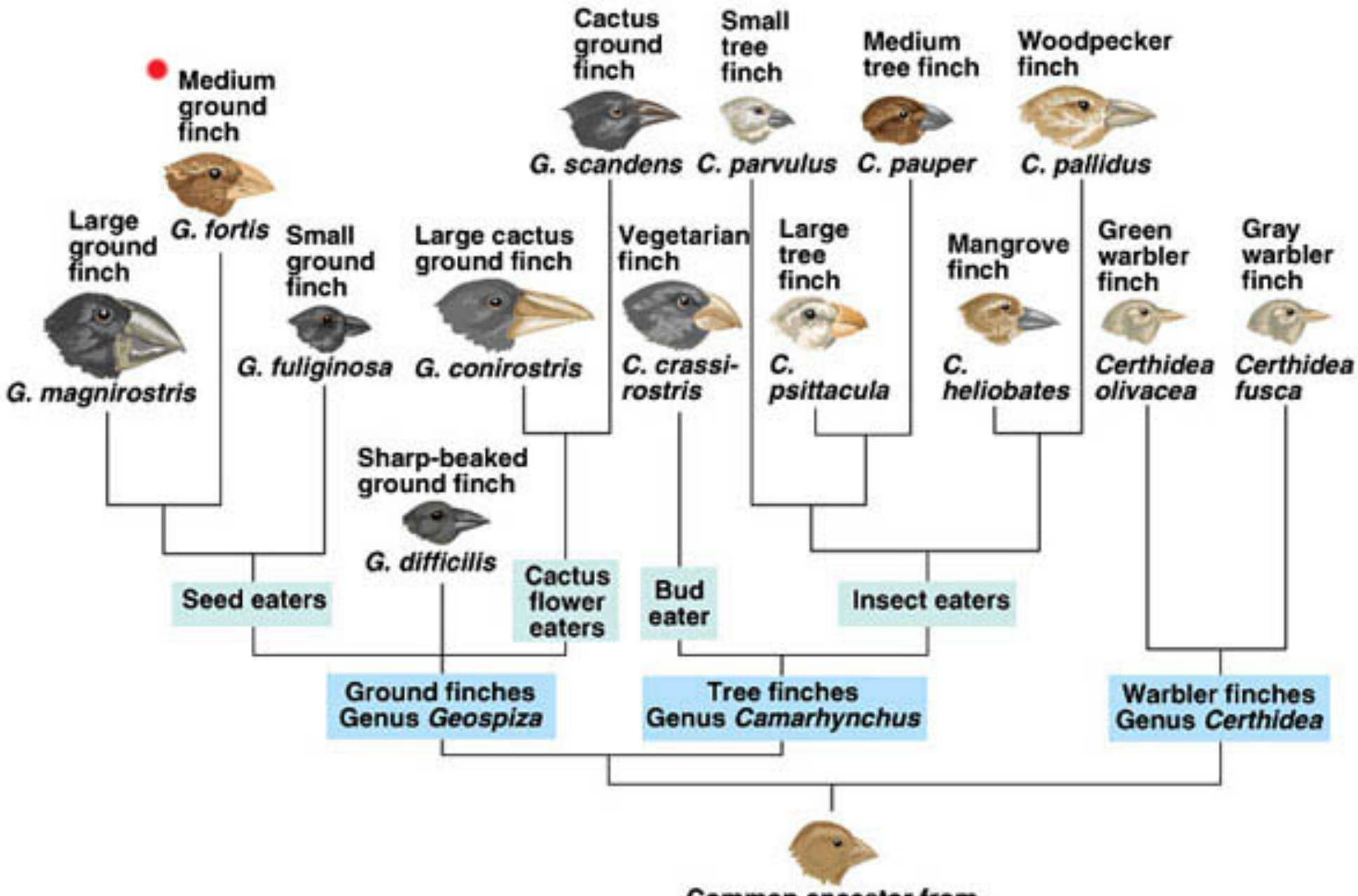

(b) The Galápagos finches

Copyright © Pearson Education, Inc., publishing as Benjamin Cummings.

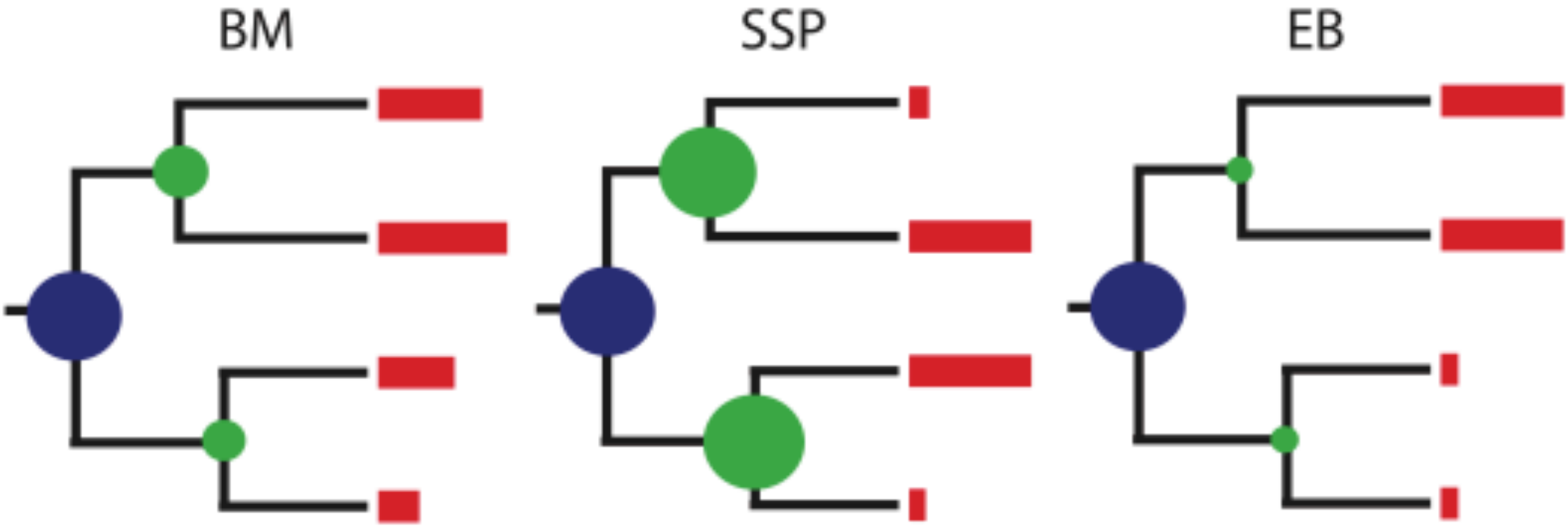

Figure 1. Example illustrating the differing predictions for the BM (Brownian motion), SSP (single stationary peak), and EB (early burst) models of morphological evolution. A hypothetical phylogenetic tree of four species is depicted. The length of each red line at the tips of each tree indicates the magnitude of a given morphological character for each species. Green circles indicate the amount of variation within subclades in the tree, whereas blue circles indicate the amount of variation in the whole clade. Subclades have much lower variation under the EB model, and greater variation under the SSP model, when each is contrasted to the BM model.

Harmon et al. 2010

Assign proportional weighting of alternative models that best fit data

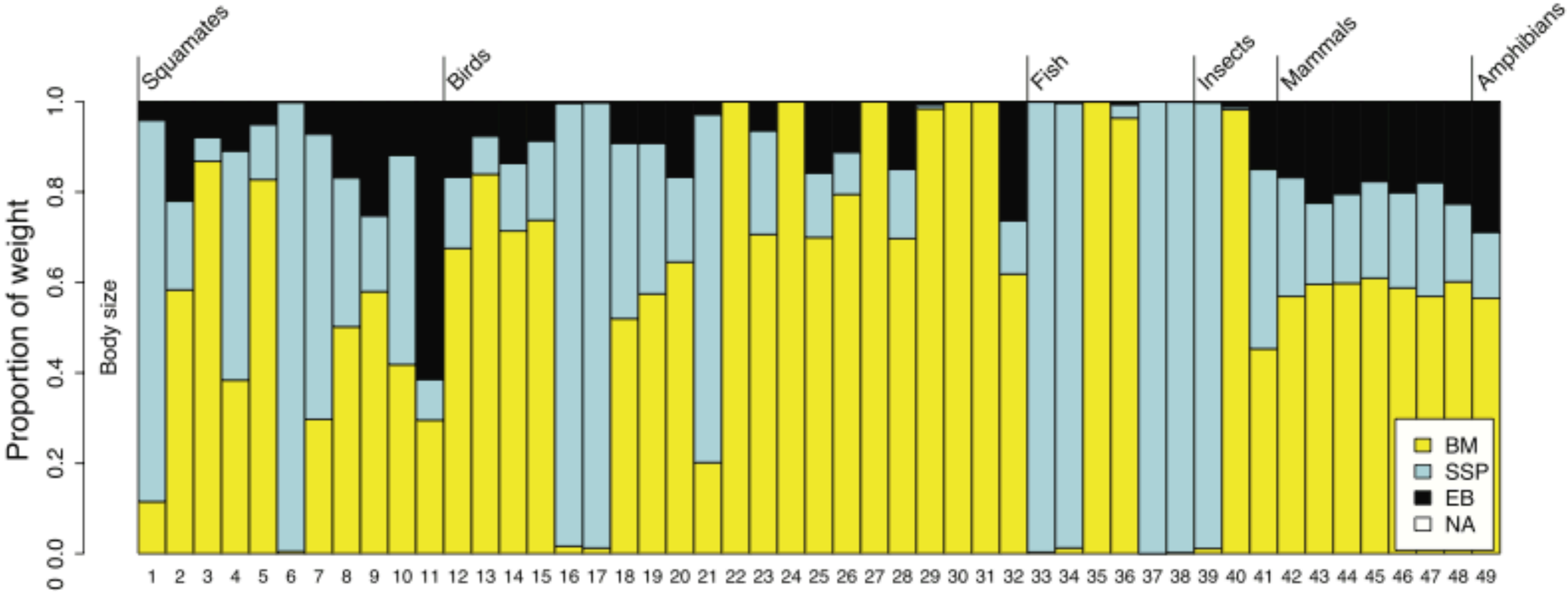

Harmon et al. 2010

Rates of phenotypic diversification under Brownian motion

$$1\ \text{felsen} = \frac{1\ \text{Var}(\log_e(\text{trait}))}{\text{million yrs}}$$

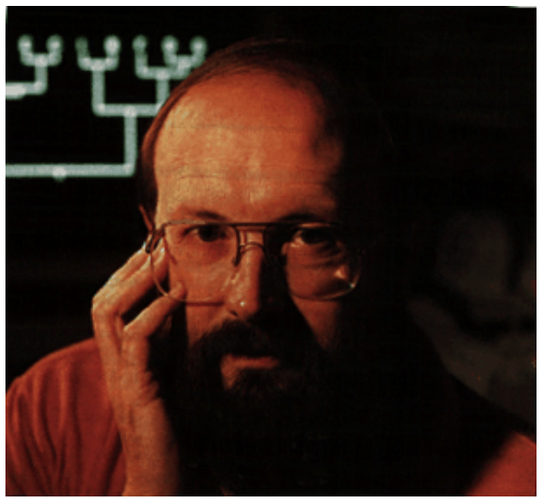

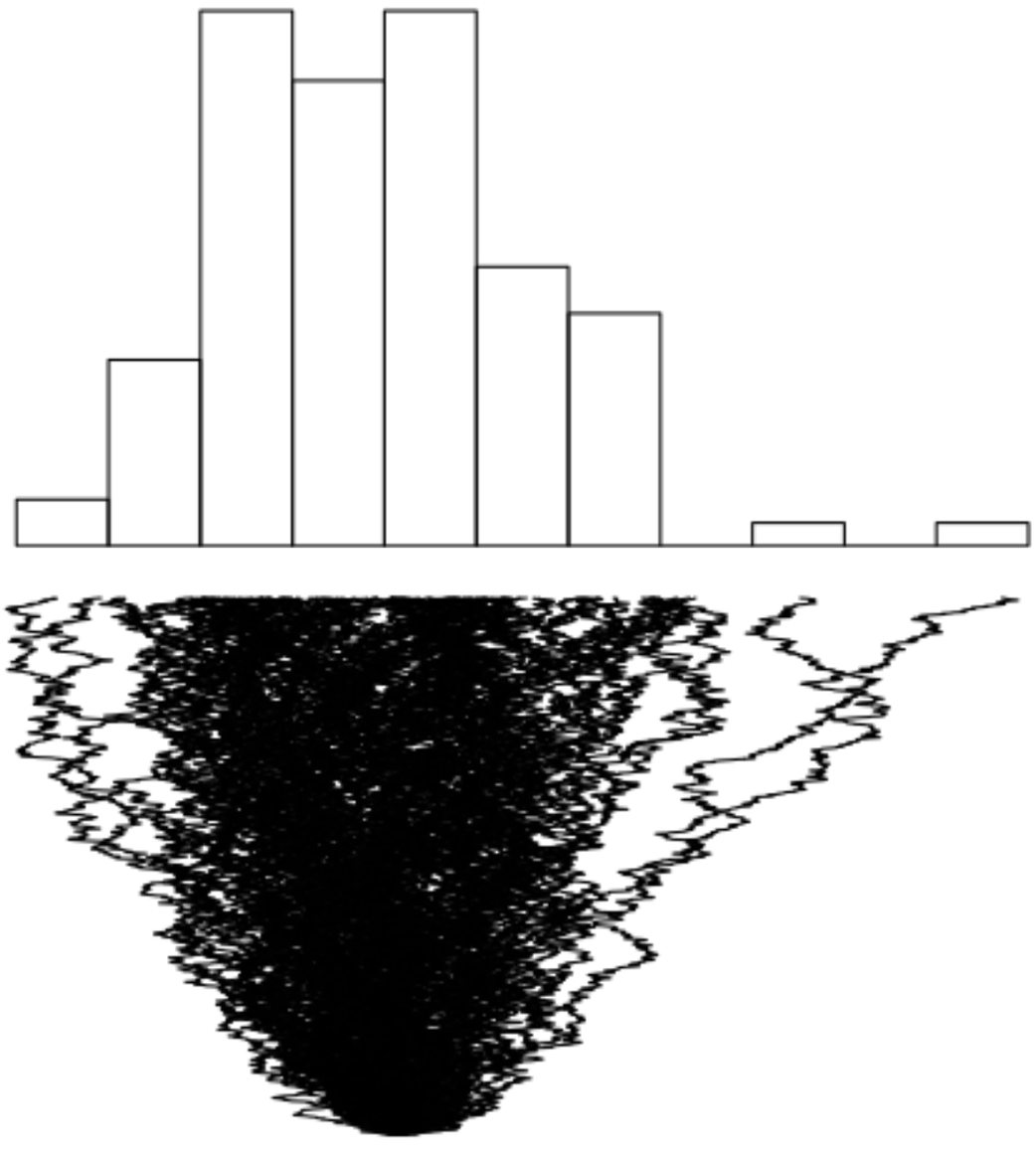

time

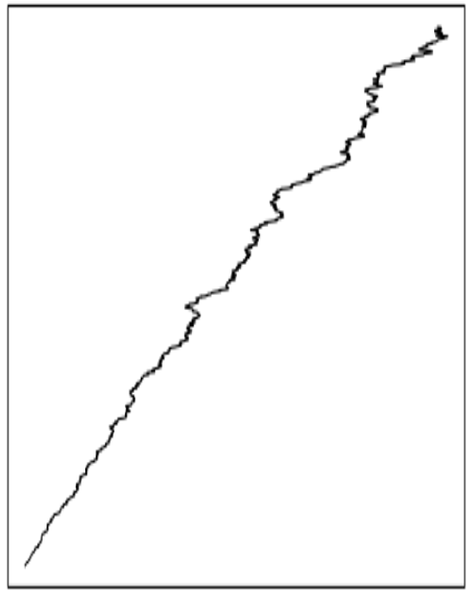

var(x)

Rates of phenotypic diversification under Brownian motion

higher rate

lower rate

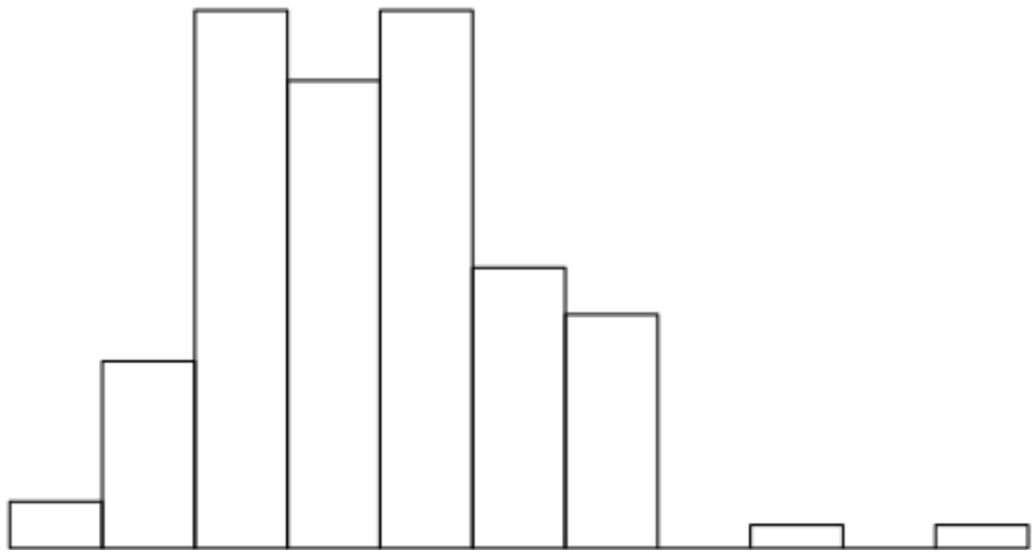

time

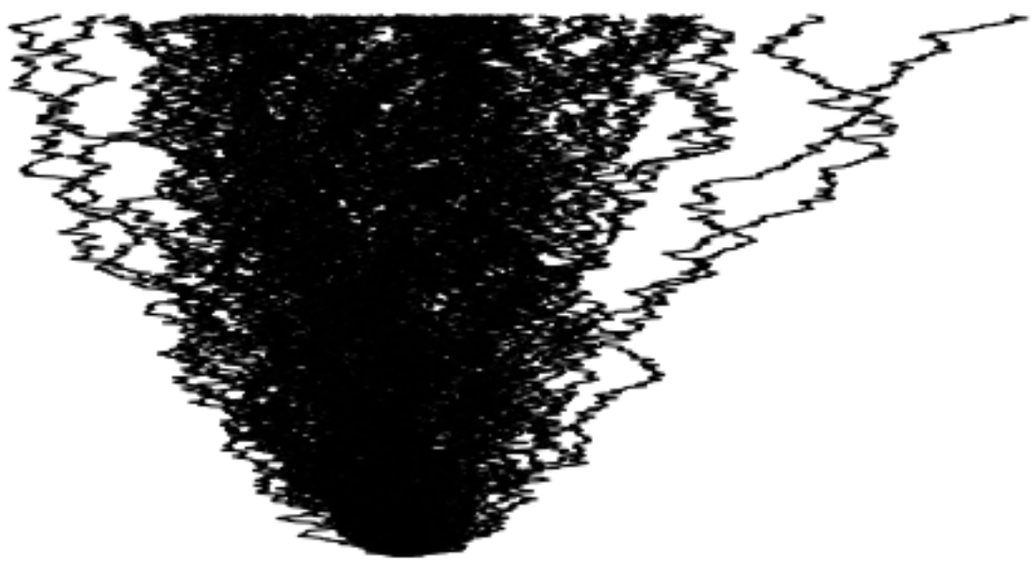

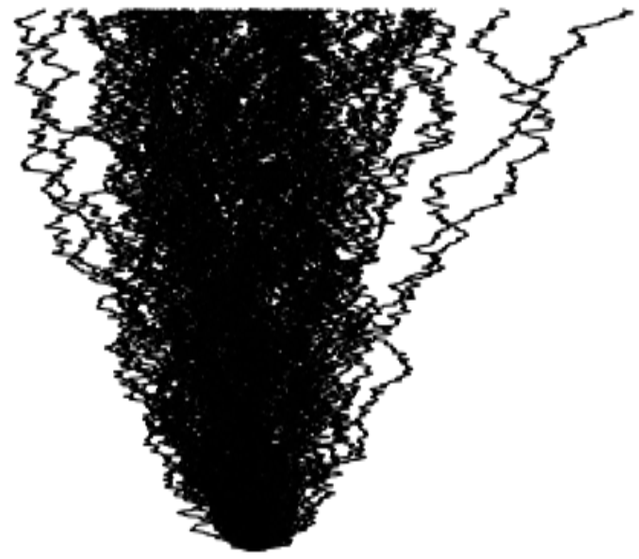

var(x)

Diversification of height in maples, *Ceanothus* and silverswords

rate = 0.015 felsens

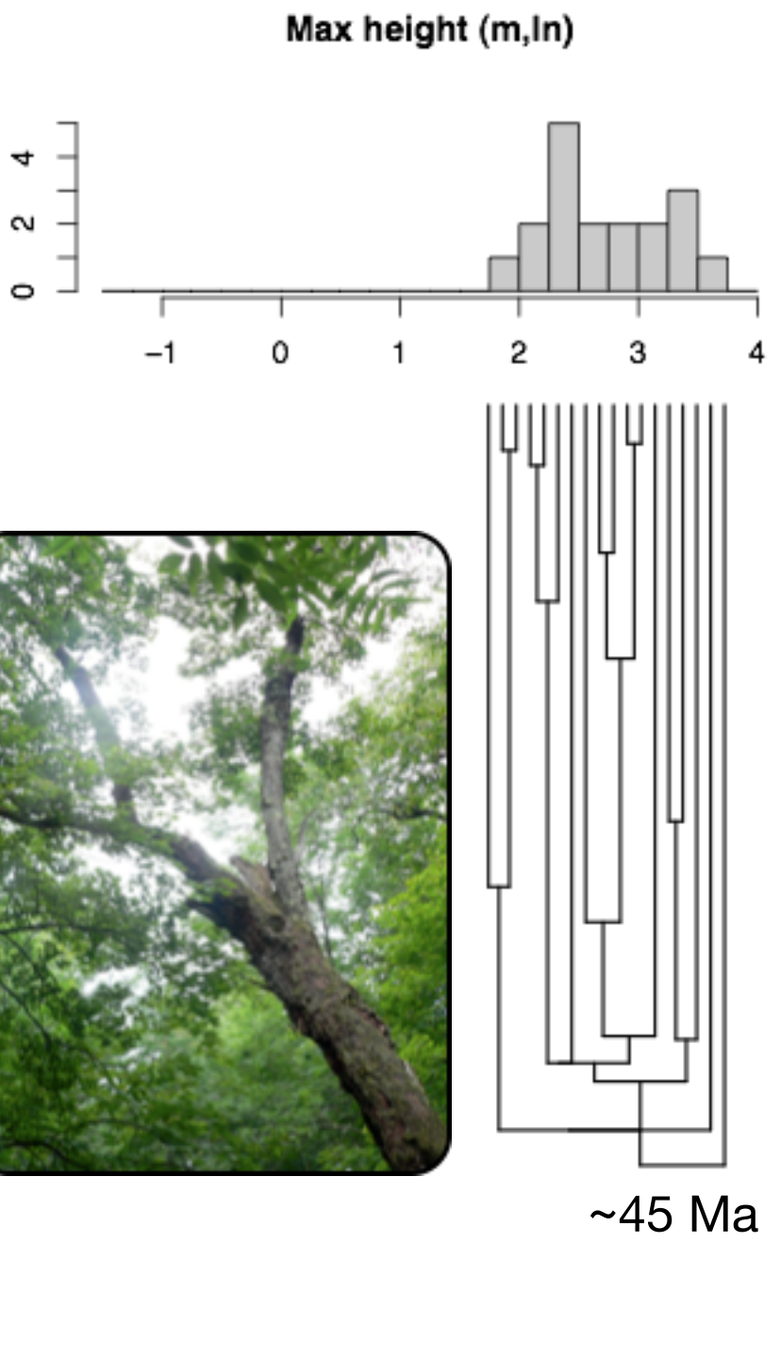

0.10 felsens

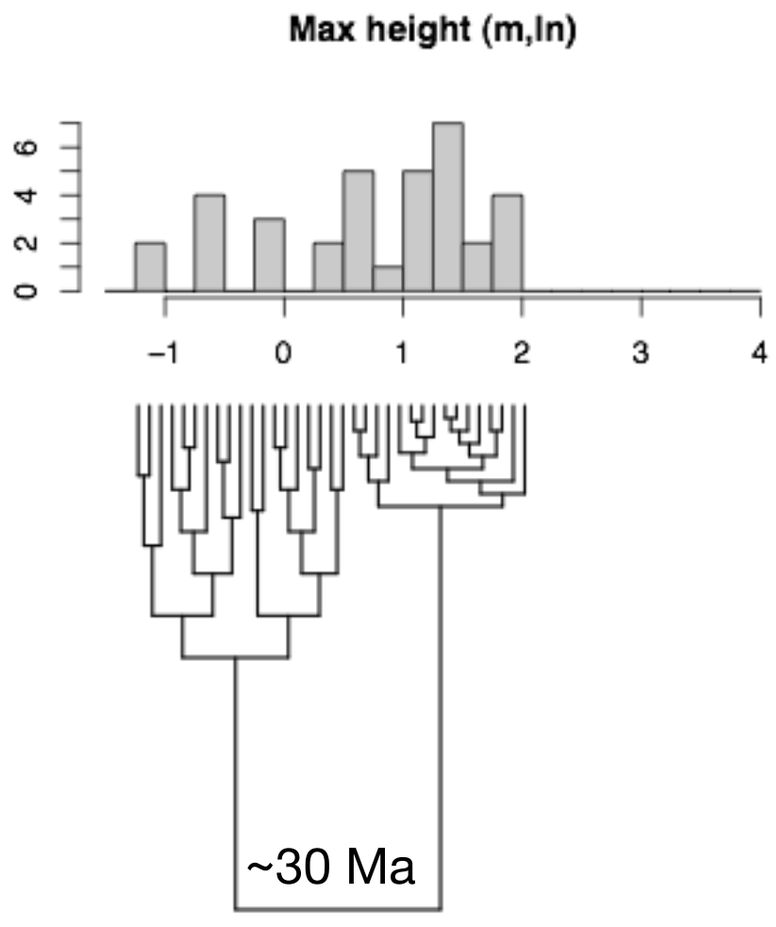

0.83 felsens

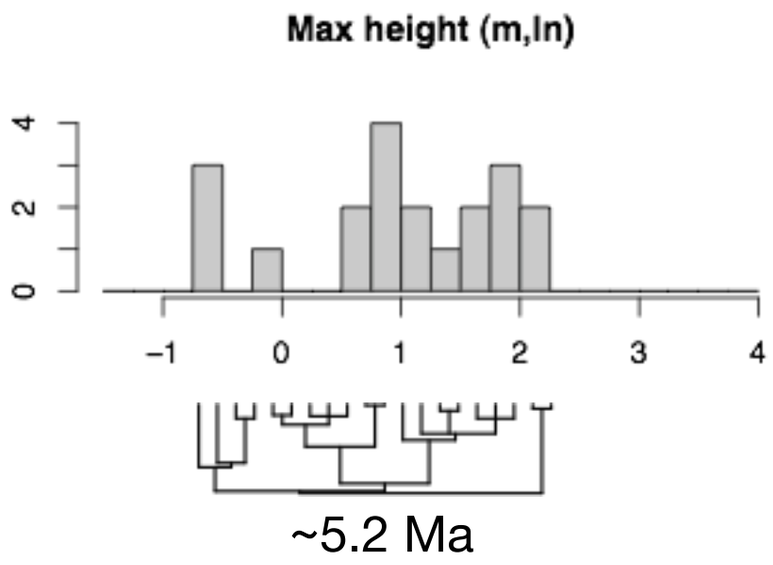

Evolutionary rates

Ackerly 2009 PNAS

Rates of phenotypic diversification (estimated for Brownian motion model)

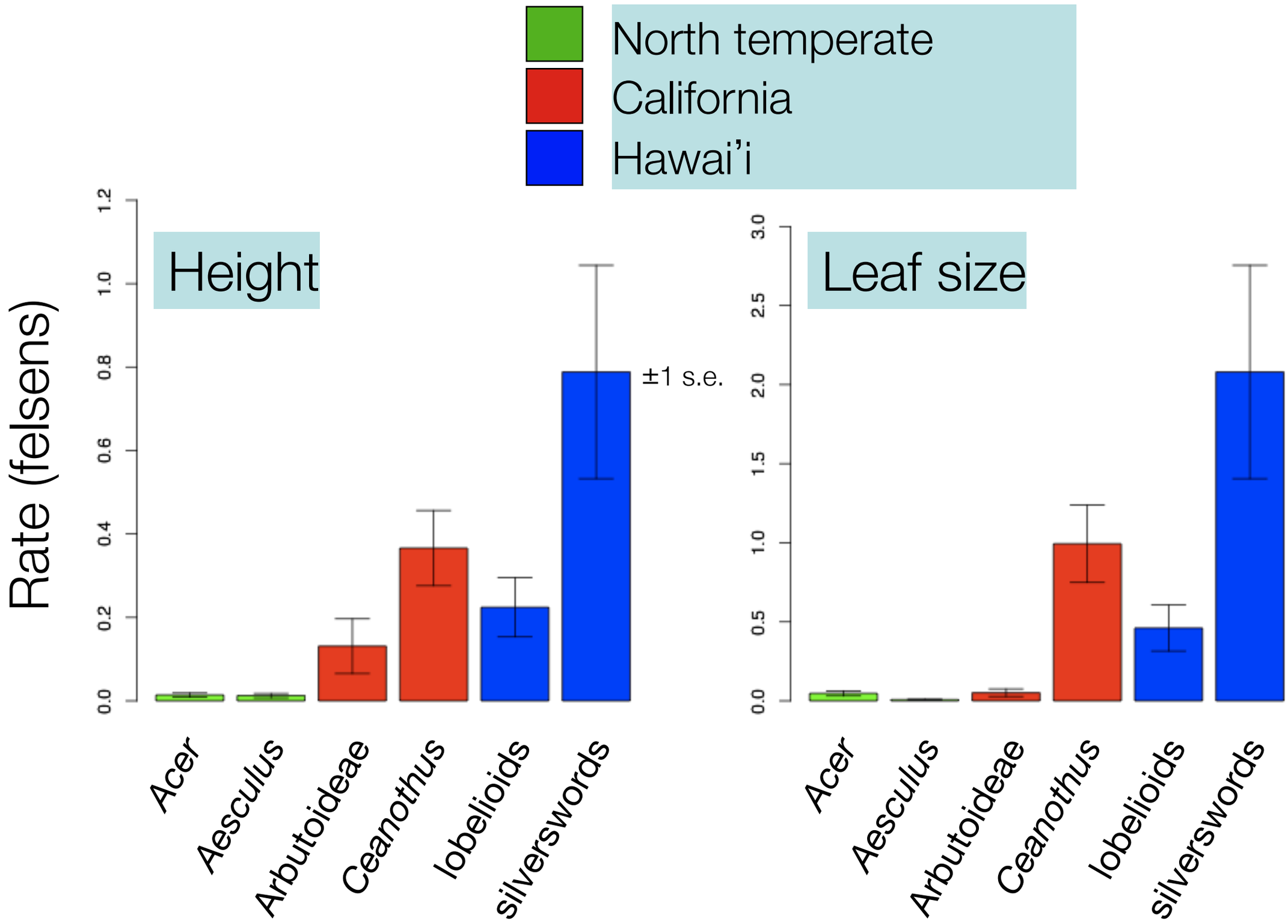

Ackerly, PNAS in review